molex
one company › a world of innovation

This document was generated on 03/18/2010

# PLEASE CHECK WWW.MOLEX.COM FOR LATEST PART INFORMATION

**Part Number:** 0190700010
**Status:** Active
**Description:** RING INSULKRIMP TAPED (AA-220-06XT)

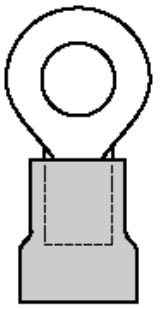

*Series image - Reference only*

**Documents:**
Drawing (PDF)
RoHS Certificate of Compliance (PDF)
Product Specification PS-19902-009 (PDF)

## Agency Certification

| | |
|---|---|
| CSA | LR18689 |
| UL | E32244 |

## General

| | |
|---|---|
| Product Family | Ring and Spade Terminals |
| Series | 19070 |
| Crimp Quality Equipment | Yes |
| Mil-Spec | N/A |
| Product Name | InsulKrimp™ |
| Type | Ring |

## Physical

| | |
|---|---|
| Barrel Type | Closed |
| Flammability | 94V-2 |
| Insulation | PVC |
| Material - Plating Mating | Tin |
| Packaging Type | Adhesive Tape on Reel |
| Stud Size | 5-6 (M3-3.5) |
| Wire Insulation Diameter | 3.70mm (.145") max. |
| Wire Size AWG | 18, 20, 22 |
| Wire Size mm² | 0.35 - 0.80 |

## Material Info

| | |
|---|---|
| Old Part Number | AA-220-06XT |

## Reference - Drawing Numbers

| | |
|---|---|
| Product Specification | PS-19902-009 |
| Sales Drawing | SD-19070-003 |

**EU RoHS**
**ELV and RoHS Compliant**
**REACH SVHC**
Not Reviewed
**Halogen-Free Status**
**Not Reviewed**

**China RoHS**

**Need more information on product environmental compliance?**

Email productcompliance@molex.com
For a multiple part number RoHS Certificate of Compliance, click here

Please visit the Contact Us section for any non-product compliance questions.

**Search Parts in this Series**
19070Series

**Application Tooling** | **FAQ**
*Tooling specifications and manuals are found by selecting the products below. Crimp Height Specifications are then contained in the Application Tooling Specification document.*
**Global**

| Description | Product # |
|---|---|
| Crimp Dies for MTA-100 Tape Applicator used in 3BF Press, MTA-105 Tape Applicator used in TM-2000™ Press, and ATP-301 Air Crimping Press for Mylar Tape Mounted Terminals | 0192880023 |
| Mini-Mac™ Applicator | 0638851300 |

This document was generated on 03/18/2010
**PLEASE CHECK WWW.MOLEX.COM FOR LATEST PART INFORMATION**

| LOOSE PIECE | | TAPE MOUNTED | | SPECIFICATIONS | | | | | | | |
|---|---|---|---|---|---|---|---|---|---|---|---|
| MATERIAL NUMBER | ALTERNATE NUMBER | MATERIAL NUMBER | ALTERNATE NUMBER | STUD SIZE | "S" ±.005/(0.13) | "W" MAX. | "C" MIN. | "L" MAX. | "ID" MIN. | STOCK THICKNESS REFERENCE | "H" ±.020/.051 |
| 190700005 | AA-220-02X | 190700006 | AA-220-02XT | 2 | .094/(2.39) | .235/(6.00) | .157/(3.99) | .709/(18.01) | .062/(1.57) | .028/(0.71) | .980/(24.89) |
| 190700007 | AA-220-04X | 190700008 | AA-220-04XT | 4 | .119/(3.02) | | | | | | |
| 190700009 | AA-220-06X | 190700010 | AA-220-06XT | 6 | .146/(3.71) | | | | | | |
| 190700011 | AA-221-06X | 190700012 | AA-221-06XT | 6 | .146/(3.71) | .322/(8.18) | .270/(6.86) | .866/(22.00) | .062/(1.57) | .028/(0.71) | |
| 190700013 | AA-221-08X | 190700014 | AA-221-08XT | 8 | .173/(4.39) | | | | | | |
| 190700015 | AA-221-10X | 190700017 | AA-221-10XT | 10 | .198/(5.03) | | | | | | |
| 190700019 | AA-221-209X | 190700020 | AA-221-209XT | M5 | .209/(5.18) | | | | | | |
| 190700021 | AA-222-10X | 190700022 | AA-222-10T | 10 | .198/(5.03) | .477/(12.11) | .386/(9.80) | 1.060/(26.92) | .062/(1.57) | .028/(0.71) | |
| 190700023 | AA-222-14X | 190700024 | AA-222-14XT | 14 | .265/(6.73) | | | | | | |
| 190700026 | AA-222-56X | 190700027 | AA-222-56XT | 5/16" | .328/(8.33) | | | | | | |
| 190700029 | AA-226-10X | 190700030 | AA-226-10XT | 10 | .198/(5.03) | .544/(13.82) | .552/(14.02) | 1.259/(31.98) | .055/(1.40) | .031/(0.79) | 1.172/(29.77) |
| 190700031 | AA-226-14X | 190700032 | AA-226-14XT | 14 | .265/(6.73) | | | | | | |
| 190700036 | AA-226-56X | 190700037 | AA-226-56XT | 5/16" | .328/(8.33) | | | | | | |
| 190700033 | AA-226-38X | 190700035 | AA-226-38XT | 3/8" | .390/(9.91) | | | | | | |
| 190700038 | AA-232-04X | 190700039 | AA-232-04XT | 4 | .119/(3.02) | .264/(6.70) | .240/(6.10) | .807/(20.50) | .062/(1.57) | .028/(0.71) | .980/(24.89) |
| 190700040 | AA-232-06X | 190700042 | AA-232-06XT | 6 | .146/(3.71) | | | | | | |
| 190700044 | AA-232-08X | 190700045 | AA-232-08XT | 8 | .173/(4.39) | | | | | | |
| 190700051 | AA-233-10X | 190700052 | AA-233-10XT | 10 | .198/(5.03) | .283/(7.20) | .240/(6.10) | .816/(20.73) | .062/(1.57) | .028/(0.71) | |
| 190700001 | AA-2111-02X | 190700002 | AA-2111-02XT | 2 | .094/(2.39) | .197/(5.00) | .173/(4.40) | .715/(18.16) | .055/(1.40) | .031/(0.79) | |
| 190700003 | AA-2111-04X | 190700004 | AA-2111-04XT | 4 | .119/(3.02) | | | | | | |

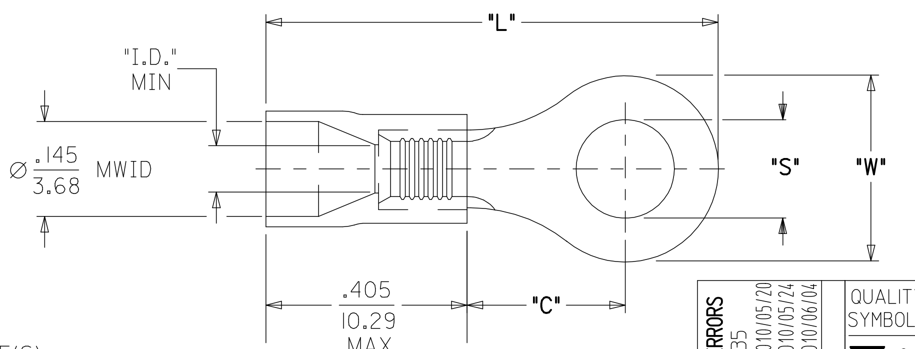


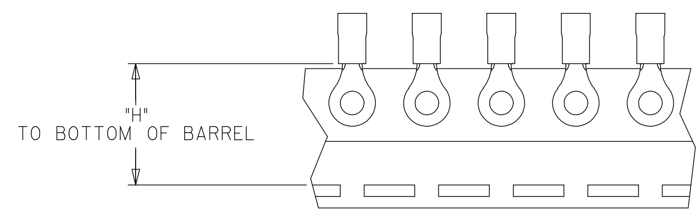


# SALES DRAWING

NOTE(S):
1. MATERIAL: COPPER
   PLATING: ELECTROPLATE TIN
(C1) 2. DELETED
3. INSULATION: RED MOLDED PVC
4. MWID=MAXIMUM WIRE INSULATION DIA.
5. ALL DIMENSIONS IN INCHES (MM).
6. PARTS ARE ROHS COMPLIANT.

| REV | DESCRIPTION |
|---|---|
| C1 | FIX NOMENCLATURE ERRORS<br>EC NO: WNA2010-0735 2010/05/20<br>DRWN: ETHRODAHL 2010/05/24<br>CH'KD: JMACNEIL 2010/06/04<br>APPR: JMACNEIL |

QUALITY SYMBOLS: ▼=0, ▽(C)=0

| GENERAL TOLERANCES (UNLESS SPECIFIED) | mm | INCH |
|---|---|---|
| 4 PLACES | ± --- | ± --- |
| 3 PLACES | ± --- | ± --- |
| 2 PLACES | ± --- | ± --- |
| 1 PLACE | ± --- | ± --- |
| ANGULAR ± ---° | | |

DRAFT WHERE APPLICABLE MUST REMAIN WITHIN DIMENSIONS

DIMENSION STYLE: IN/MM | SCALE: --- | DESIGN UNITS: INCH | THIRD ANGLE PROJECTION

DRAWN BY: DMYRICK, DATE: 2005/7/22
CHECKED BY: HBEITZEL, DATE: 2005/7/22
APPROVED BY: RDEROSS, DATE: 2005/7/22

TITLE: RING TONGUE TERMINAL INSULKRIMP, 200-SERIES 22-18 AWG (C1)

MOLEX INCORPORATED

MATERIAL NO.: SEE CHART
DOCUMENT NO.: SD-19070-003
SHEET NO.: 1 OF 1
SIZE: B

THIS DRAWING CONTAINS INFORMATION THAT IS PROPRIETARY TO MOLEX INCORPORATED AND SHOULD NOT BE USED WITHOUT WRITTEN PERMISSION