THIS DRAWING IS UNPUBLISHED. RELEASED FOR PUBLICATION 20
© COPYRIGHT 20 BY TYCO ELECTRONICS CORPORATION, ALL RIGHTS RESERVED.

LOC	DIST
-	-

REVISIONS

P	LTR	DESCRIPTION	DATE	DWN	APVD
	1	PROPOSED	13NOV2007	GS	-
	2	TITLE, SHEET 2, THERM. CONDUCT. PAD	24JUN2008	RB	CG

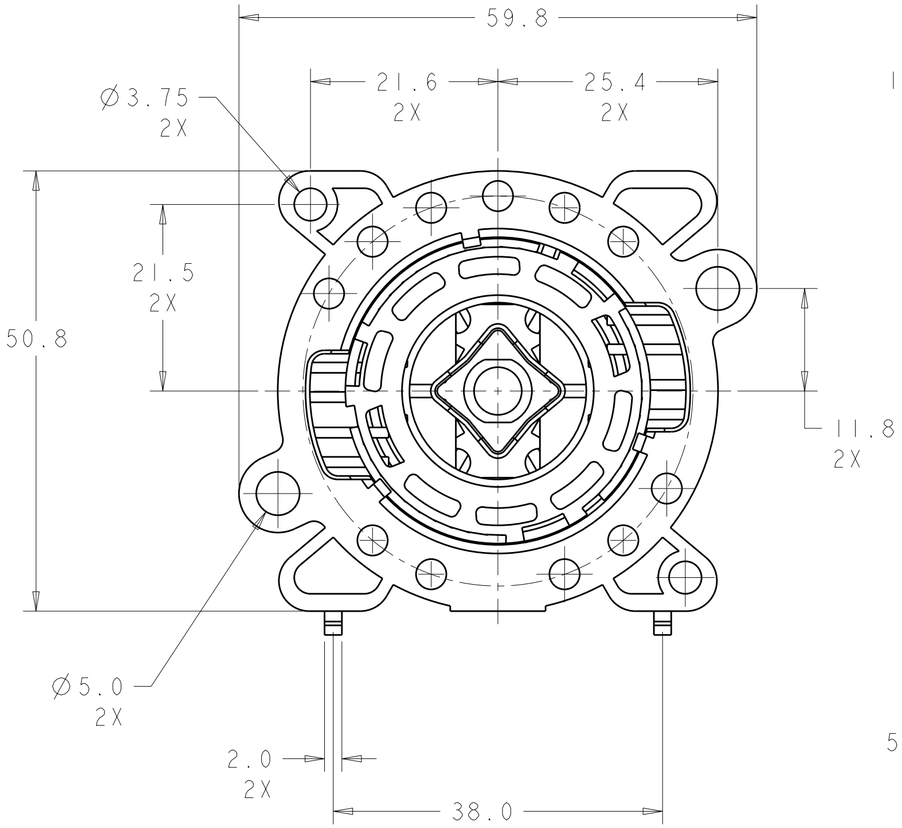

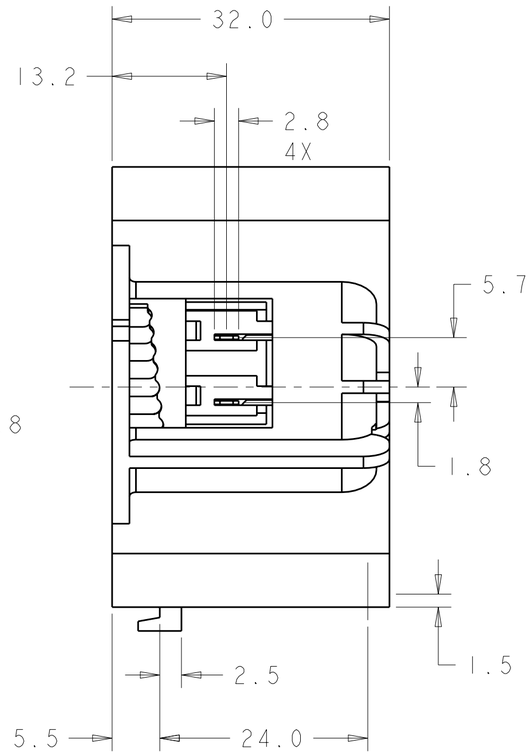

1. ASSEMBLY SHIPPED UNASSEMBLED

2. MATERIALS AND FINISH:
   - CONTACT CARRIER: PBT
   - LOCKING RING: PBT
   - CONTACTS: COPPER ALLOY, FINISH: TIN
   - HEAT SINK: CAST ALUMINIUM

3. MUST COMPLY WITH DIRECTIVE 2002/95/EC (ROHS)

4. THIS PRODUCT HAS NOT COMPLETED VALIDATION TESTING

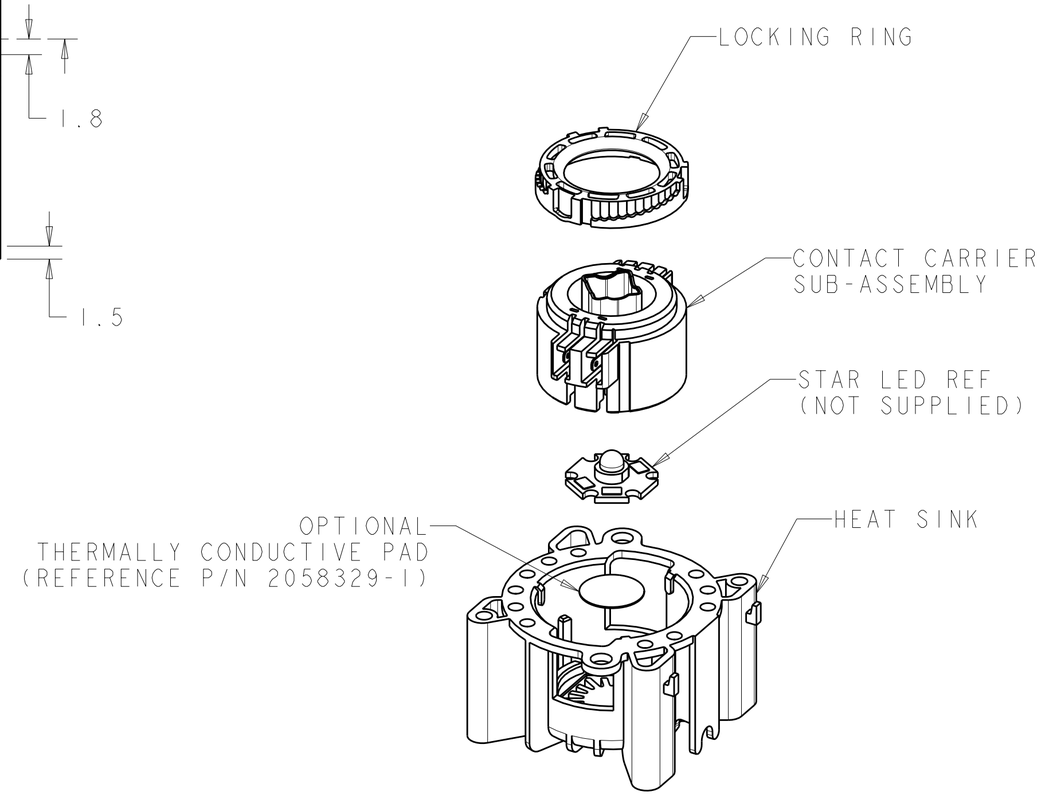

EXPLODED VIEW
SCALE 1:1

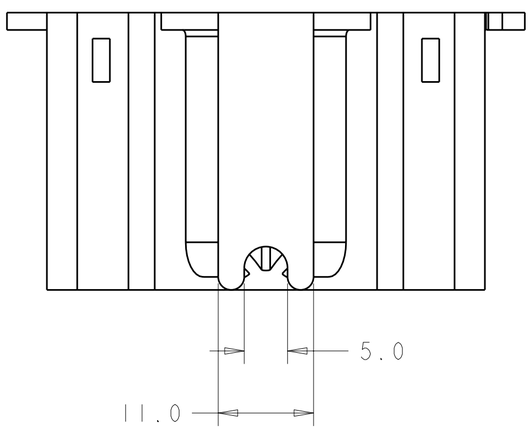

TYCO ELECTRONICS
CONFIDENTIAL
AND PROPRIETARY

PROPOSED DESIGN

NOT PRODUCTION TOOLED

DESIGN IS SUBJECT TO
CHANGE WITHOUT NOTICE

2008639-1
PART NUMBER

THIS DRAWING IS A CONTROLLED DOCUMENT FOR TYCO ELECTRONICS CORPORATION. IT IS SUBJECT TO CHANGE AND THE CONTROLLING ENGINEERING ORGANIZATION SHOULD BE CONTACTED FOR THE LATEST REVISION.

DIMENSIONS: mm

TOLERANCES UNLESS OTHERWISE SPECIFIED:
0 PLC ±-
1 PLC ±0.2
2 PLC ±0.15
3 PLC ±-
4 PLC ±-
ANGLES ±1°

MATERIAL -
FINISH -

DWN C.DAILY 13NOV2007
CHK C.GINGRICH -
APVD -
PRODUCT SPEC -
APPLICATION SPEC -
WEIGHT -

Tyco Electronics
Tyco Electronics
Harrisburg, PA 17105-3608

NAME ASSY, HIGH POWER LED LIGHT SOCKET FOR AMP LIGHT GUIDE
-

SIZE	CAGE CODE	DRAWING NO	RESTRICTED TO
A2	00779	C-2008639	-

CUSTOMER DRAWING | SCALE 2:1 | SHEET 1 OF 2 | REV 2

AMP 1471-9 REV 31MAR2000

Pro/ENGINEER DRAWING

THIS DRAWING IS UNPUBLISHED. RELEASED FOR PUBLICATION 20
© COPYRIGHT 20 BY TYCO ELECTRONICS CORPORATION, ALL RIGHTS RESERVED.

LOC	DIST
-	-

REVISIONS

P	LTR	DESCRIPTION	DATE	DWN	APVD
	-	SEE SHEET 1	-	-	-

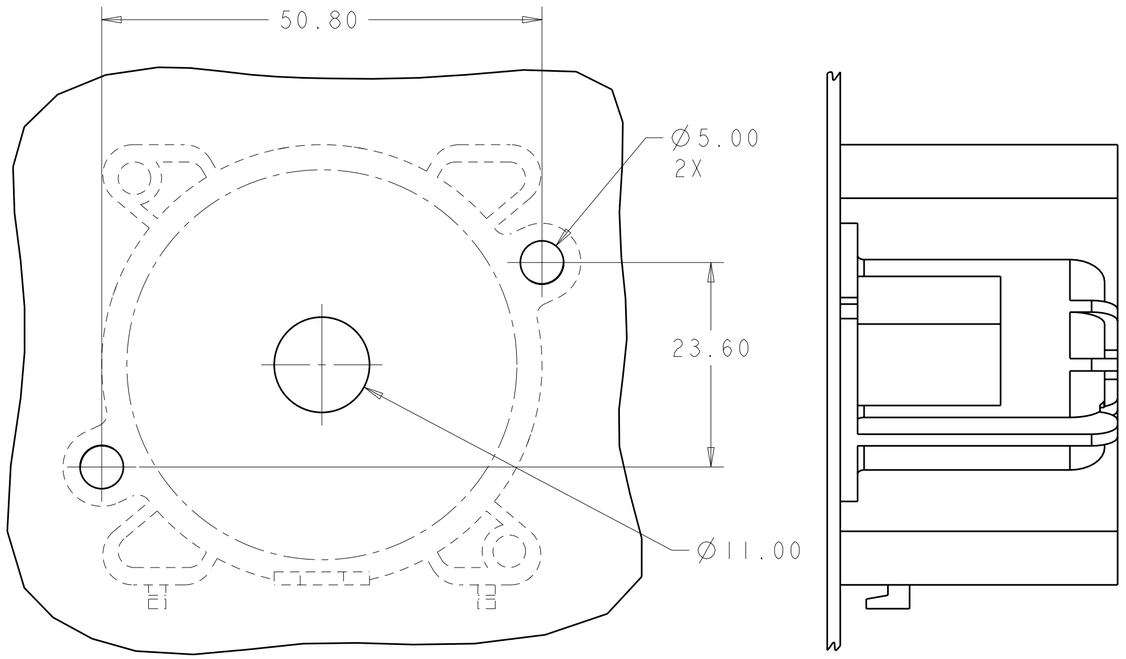

PANEL LAYOUT
FRONT FACE MOUNTED

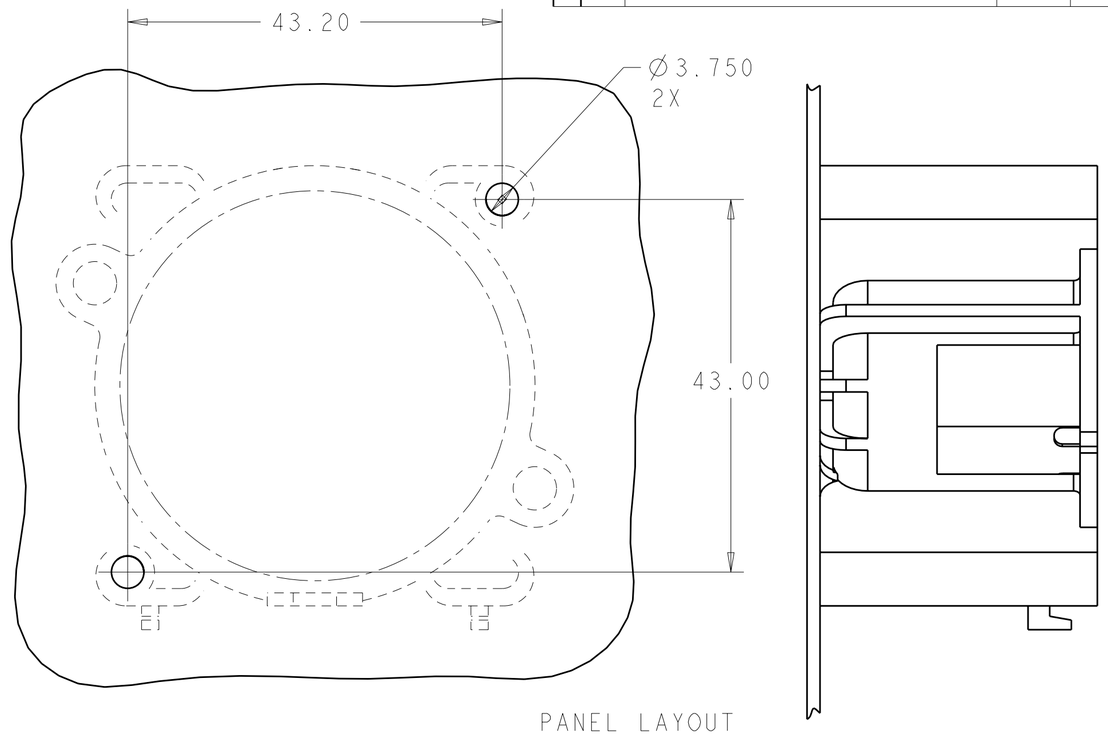

PANEL LAYOUT
BACK FACE MOUNTED

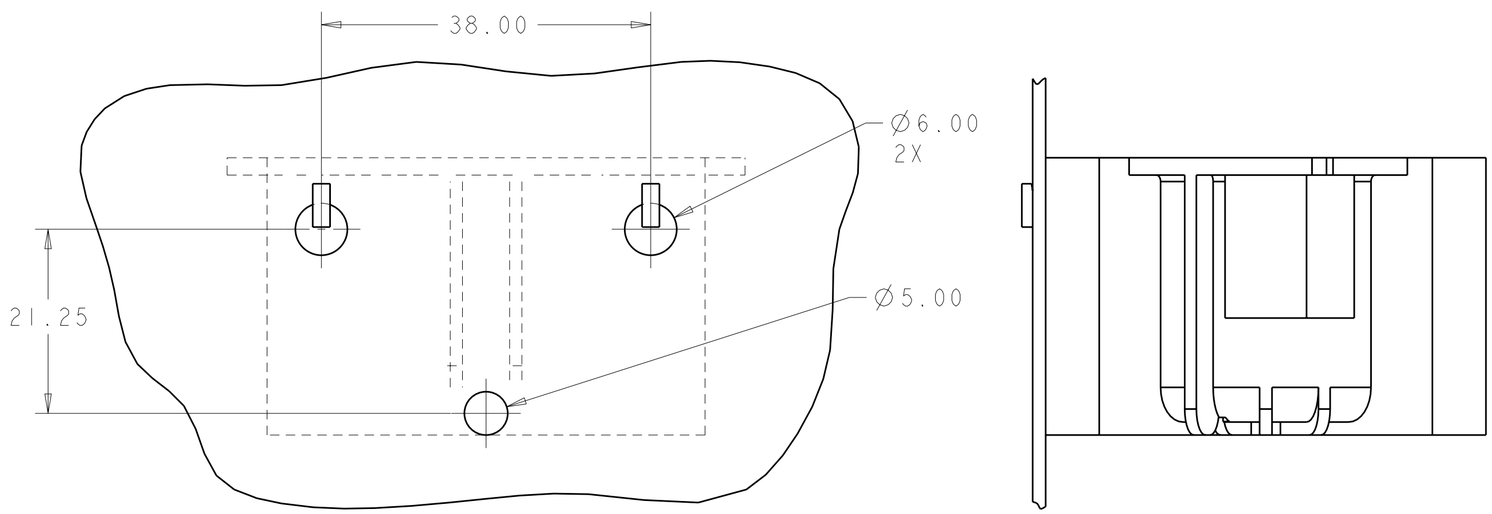

PANEL LAYOUT
BOTTOM MOUNTED
(1.2mm MAX PANEL THICKNESS)

TYCO ELECTRONICS
CONFIDENTIAL
AND PROPRIETARY

PROPOSED DESIGN

NOT PRODUCTION TOOLED

DESIGN IS SUBJECT TO
CHANGE WITHOUT NOTICE

THIS DRAWING IS A CONTROLLED DOCUMENT FOR TYCO ELECTRONICS CORPORATION. IT IS SUBJECT TO CHANGE AND THE CONTROLLING ENGINEERING ORGANIZATION SHOULD BE CONTACTED FOR THE LATEST REVISION.

DIMENSIONS: mm

TOLERANCES UNLESS OTHERWISE SPECIFIED:
0 PLC ±-
1 PLC ±0.2
2 PLC ±0.15
3 PLC ±-
4 PLC ±-
ANGLES ±1°

MATERIAL -
FINISH -

DWN C.DAILY 13NOV2007
CHK C.GINGRICH -
APVD -
PRODUCT SPEC -
APPLICATION SPEC -
WEIGHT -

Tyco Electronics
Tyco Electronics
Harrisburg, PA 17105-3608

NAME ASSY, HIGH POWER LED LIGHT SOCKET FOR AMP LIGHT GUIDE -

SIZE	CAGE CODE	DRAWING NO	RESTRICTED TO
A2	00779	C-2008639	-

CUSTOMER DRAWING | SCALE 2:1 | SHEET 2 OF 2 | REV 2

AMP 1471-9 REV 31MAR2000