THIS DRAWING IS UNPUBLISHED. RELEASED FOR PUBLICATION 20
© COPYRIGHT 20 BY TYCO ELECTRONICS CORPORATION. ALL RIGHTS RESERVED.

LOC	DIST
FT	0

REVISIONS

P	LTR	DESCRIPTION	DATE	DWN	APVD
	C	REVISED PER 0G3B-0106-01	05SEP2001	EZ	DB
	D	REVISED PER 0G3B-0119-01	05SEP2001	EZ	DB
	E	REVISED EC 0G3B-0115-02	16JAN2003	SW	CR

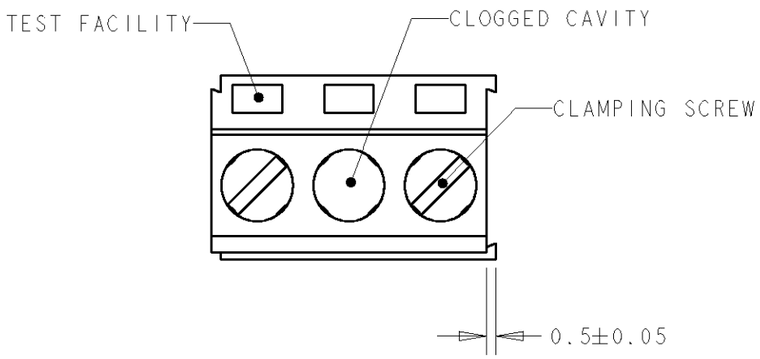

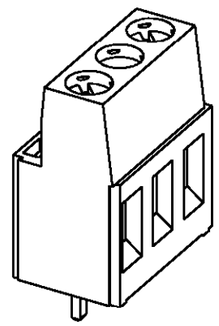

282858-2 AS SHOWN
SCALE 2:1

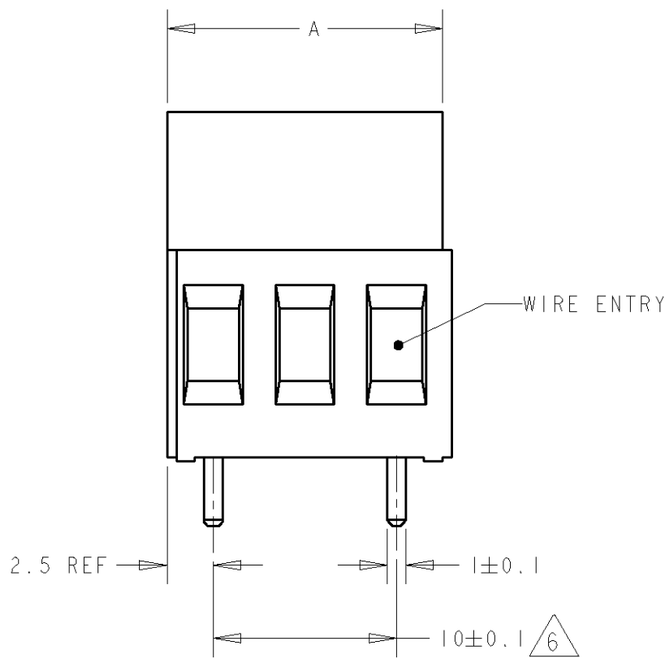

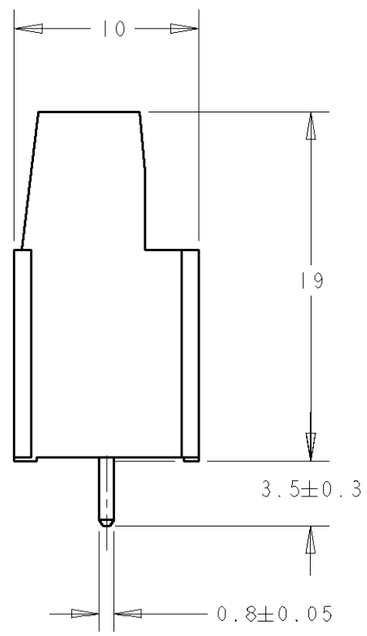

1 MATERIALS AND FINISH
HOUSING: PA 6-6, UL 94-V0, COLOR GREEN.
CLAMP: BRASS, NICKEL PLATED.
TERMINAL: BRASS, TIN PLATED.
CLAMPING SCREW: M3, BRASS, NICKEL PLATED.

2 SUITABLE FOR 1,6-2,4mm PC BOARD THICKNESS.

3 WIRE SIZE RANGE
SOLID WIRE: 0,03-4mm² (11AWG).
STRANDED WIRE: 0,03-2,5mm² (13AWG).

4 RECOGNIZED UNDER THE COMPONENT PROGRAM OF UNDERWRITERS LABORATORIES INC. FILE N° E60677.

5 IMQ CERTIFICATE WITH SURVEILLANCE IN CONFORMITY WITH IEC 998-1/998-2-1.

6 NOT CUMULATIVE TOLERANCE.

DIM. A	N° OF POS.	PART NUMBER
125	13	1-282858-3
115	12	1-282858-2
105	11	1-282858-1
95	10	1-282858-0
85	9	282858-9
75	8	282858-8
65	7	282858-7
55	6	282858-6
45	5	282858-5
35	4	282858-4
25	3	282858-3
15	2	282858-2

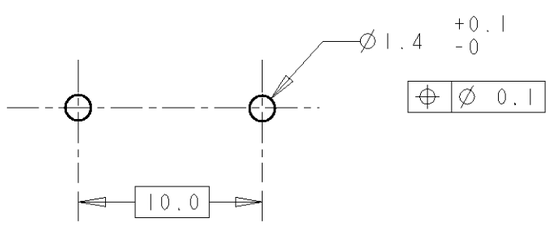

RECOMMENDED PC BOARD LAYOUT

THIS DRAWING IS A CONTROLLED DOCUMENT FOR TYCO ELECTRONICS CORPORATION. IT IS SUBJECT TO CHANGE AND THE CONTROLLING ENGINEERING ORGANIZATION SHOULD BE CONTACTED FOR THE LATEST REVISION.

DIMENSIONS: mm

TOLERANCES UNLESS OTHERWISE SPECIFIED:

0 PLC	±-
1 PLC	±.3
2 PLC	±.25
3 PLC	±-
4 PLC	±-
ANGLES	±2

MATERIAL 1

FINISH 1

DWN	05SEP2001 E. ZANOLINI
CHK	05SEP2001 D. BIEVENOUR
APVD	05SEP2001 D. BIEVENOUR
PRODUCT SPEC	108-20166
APPLICATION SPEC	114-20079
WEIGHT	-

BUCHANAN
Tyco Electronics
Harrisburg, PA 17105-3608

NAME: TERMINAL BLOCK, PCB MOUNT, SIDE ENTRY WIRE, 10.0mm PITCH

SIZE	CAGE CODE	DRAWING NO	RESTRICTED TO
A3	00779	C-282858	-

CUSTOMER DRAWING | SCALE 3:1 | SHEET 1 OF 1 | REV E

AMP 1470-19 REV 31MAR2000

Pro/ENGINEER DRAWING