400NS/400NSR

SILICON POWER DIODES

NSL NAINA

DO - 9

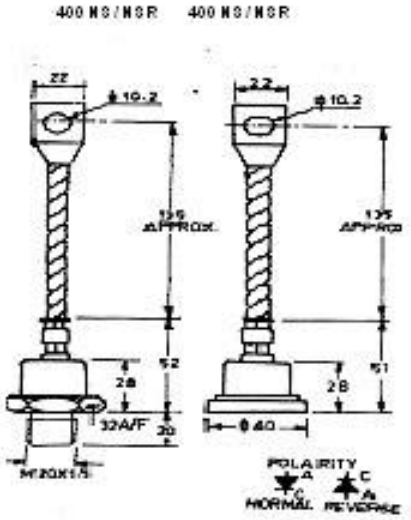

FEATURES

- Diffused Series
- Available in Normal & Reverse Polarity
- Industrial Grade
- Available In Avalanche Characteristic

ELECTRICAL SPECIFICATIONS

I_F	Maximum Average Forward Current Te=125°C	400A
V_{FM}	Maximum peak forward voltage drop @ Rated IF(AV)	1.4V
I_{FSM}	Maximum peak one cycle (non-rep) surge current 10 m sec	8250A
I_{FRM}	Maximum peak repetitive surge current	1400A
I^2t	Maximum I^2t rating (non-rep.) for 5 to 10 msec.	340,000 A^2, Sec

THERMAL MECHANICAL SPECIFICATIONS

θ_{JC}	Maximum thermal resistance Junction to case	0.15°C/W
Tj	Operating Junction Temp.	-65°C to 150°C
Tstg	Storage temperature	-65°C to 200°C
	Mounting torque (Non-lubricated threads)	3.2 M-kg min, 3.75 M-kg max
W	Approx, weight	260 gms.

ELECTRICAL RATINGS

V_{RRM}	Max. repetitive peak voltage (v)	100	200	400	600	800	1000	1200	1400	1600
$V_{R(RMS)}$	Max. R.M.S. Reverse Voltage(V)	70	140	280	420	560	700	840	980	1120
V_R	Max. D.C. Blocking Voltage (V)	100	200	400	600	800	1000	1200	1400	1600
	Recommended R.M.S. working Voltage(v)	40	80	160	240	320	400	480	560	640
$I_{R(AV)}$	Max. Average reverse leakage current @ VRRM Tc=25°C (mA)	3	3	3	3	3	3	3	3	3