molex
one company › a world of innovation

This document was generated on 05/21/2010

PLEASE CHECK WWW.MOLEX.COM FOR LATEST PART INFORMATION

Part Number: 0447640801

Status: Active

Overview: microfit_30

Description: 3.00mm (.118") Pitch Micro-Fit 3.0, BMI™ Receptacle Header, Dual Row, Right Angle, with Press-fit Plastic Pegs, 2.54µm (100µ") Tin (Sn), 8 Circuits

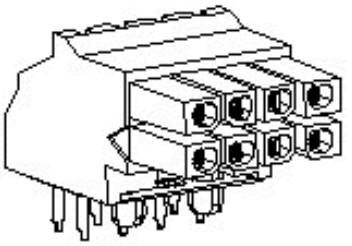

Series

image - Reference only

Documents:

3D Model	Product Specification PS-44300-001 (PDF)
Drawing (PDF)	RoHS Certificate of Compliance (PDF)

Agency Certification

CSA	LR19980
TUV	R72081037
UL	E29179

General

Product Family	PCB Receptacles
Series	44764
Application	Board-to-Board, Wire-to-Board
Overview	microfit_30
Product Literature Order No	USA-106
Product Name	Micro-Fit 3.0 BMI™

Physical

Circuits (Loaded)	8
Durability (mating cycles max)	30
Flammability	94V-0
Glow-Wire Compliant	No
Material - Metal	Phosphor Bronze
Material - Plating Mating	Tin
Material - Plating Termination	Tin
Number of Rows	2
Orientation	Right Angle
PCB Locator	Yes
PCB Retention	Yes
PCB Thickness Recommended (in)	0.062 In
PCB Thickness Recommended (mm)	1.60 mm
Packaging Type	Tray
Pitch - Mating Interface (in)	0.118 In
Pitch - Mating Interface (mm)	3.00 mm
Plating min: Mating (µin)	40.8
Plating min: Mating (µm)	1.02
Plating min: Termination (µin)	40.8
Plating min: Termination (µm)	1.02
Polarized to PCB	Yes
Surface Mount Compatible (SMC)	No
Temperature Range - Operating	-40°C to +105°C
Termination Interface: Style	Through Hole

Electrical

Current - Maximum per Contact	5A
Voltage - Maximum	250V

Solder Process Data

Duration at Max. Process Temperature (seconds)	5
Lead-free Process Capability	Wave Capable (TH only)
Max. Cycles at Max. Process Temperature	1

EU RoHS
ELV and RoHS Compliant

China RoHS

REACH SVHC
Contains SVHC: No

Halogen-Free Status
Not Halogen-Free

Need more information on product environmental compliance?

Email productcompliance@molex.com
For a multiple part number RoHS Certificate of Compliance, click here

Please visit the Contact Us section for any non-product compliance questions.

Search Parts in this Series
44764Series

Mates With
44428 , 44300 , 44432

Process Temperature max. C	260

Material Info

Reference - Drawing Numbers

Packaging Specification	PK-44764-001
Product Specification	PS-44300-001, RPS-44300-001
Sales Drawing	SD-44764-001, SD-44764-003

This document was generated on 05/21/2010

PLEASE CHECK WWW.MOLEX.COM FOR LATEST PART INFORMATION

44764

MATERIAL NUMBER	NUMBER OF POSITIONS	PLATING OPTION
44764-0401	04	A
44764-0402	04	B
44764-0403	04	C
44764-0601	06	A
44764-0602	06	B
44764-0603	06	C
44764-0801	08	A
44764-0802	08	B
44764-0803	08	C
44764-1001	10	A
44764-1002	10	B
44764-1003	10	C
44764-1201	12	A
44764-1202	12	B
44764-1203	12	C
44764-1401	14	A
44764-1402	14	B
44764-1403	14	C
44764-1601	16	A
44764-1602	16	B
44764-1603	16	C
44764-1801	18	A
44764-1802	18	B
44764-1803	18	C
44764-2001	20	A
44764-2002	20	B
44764-2003	20	C
44764-2201	22	A
44764-2202	22	B
44764-2203	22	C
44764-2401	24	A
44764-2402	24	B
44764-2403	24	C

NUMBER OF POSITIONS	DIM. "A"	DIM. "B"	DIM. "C"
24	1.445/(36.70)	1.299/(33.00)	1.181/(30.00)
22	1.327/(33.70)	1.181/(30.00)	1.063/(27.00)
20	1.209/(30.70)	1.063/(27.00)	.945/(24.00)
18	1.091/(27.70)	.945/(24.00)	.827/(21.00)
16	.972/(24.70)	.827/(21.00)	.709/(18.00)
14	.854/(21.70)	.709/(18.00)	.591/(15.00)
12	.736/(18.70)	.591/(15.00)	.472/(12.00)
10	.618/(15.70)	.472/(12.00)	.354/(9.00)
8	.500/(12.70)	.354/(9.00)	.236/(6.00)
6	.382/(9.70)	.236/(6.00)	———
4	.264/(6.70)	.118/(3.00)	———

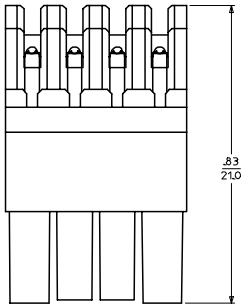

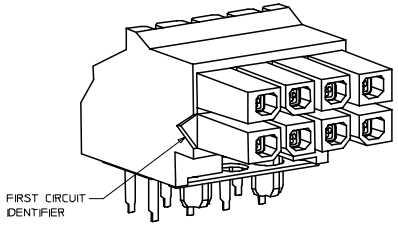

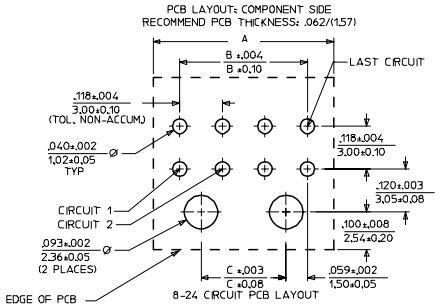

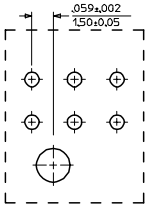

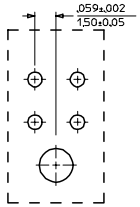

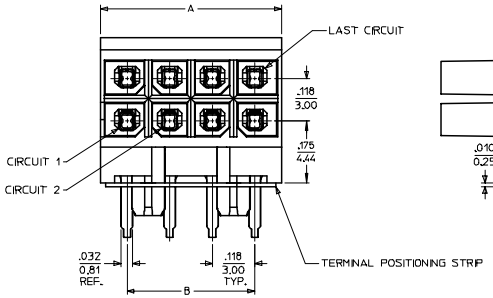

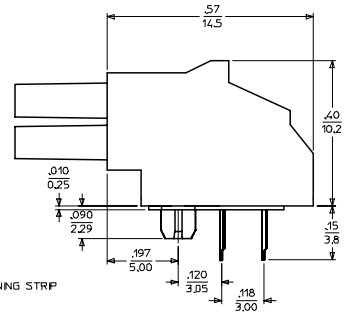

NOTES:
1. MATERIAL:
   HOUSING: HIGH TEMP NYLON, GLASS FILLED, U.L. 94V-0, COLOR BLACK
   TERMINAL: PHOSPHOR BRONZE ALLOY
   POSITIONING STRIP: MYLAR, COLOR NATURAL
2. FINISH:
   (A) = HOT TIN DIP: .000040/0.00102 MIN.
   (B) = SELECTIVE GOLD IN THE CONTACT AREA: .000015/0.00039 MIN., SELECTIVE TIN IN THE PC TAIL AREA: .000100/0.00254 MIN., BOTH OVER .000050/0.00127 MIN. NICKEL.
   (C) = SELECTIVE GOLD IN THE CONTACT AREA: .000030/0.00076 MIN., SELECTIVE TIN IN THE PC TAIL AREA: .000100/0.00254 MIN., BOTH OVER .000050/0.00127 MIN. NICKEL.
   * THE PRIMARY SHIPPING CARTON WILL BE LABELED "COMPLIANT TO RoHS DIRECTIVE 2002/95/EC AND ELV ANNEX II OF DIRECTIVE 2000/53/EC." CARTONS WITHOUT THIS LABEL MAY CONTAIN PRODUCT WITH TIN/LEAD IN THE PC TAIL AREA.
3. PRODUCT SPECIFICATIONS: PS-44300-001
4. PACKAGING SPECIFICATION: PER MOLEX DRAWING PK-44764-001
5. MATES WITH HEADER ASSEMBLY 44428, 44432, AND 44300
6. MOLEX RECOMMENDS THE USE OF MICRO-FIT TEST PLUG (SERIES 44242) WHENEVER CONTINUITY TESTING IS PERFORMED. TEST PLUGS MUST NOT BE USED TO MAKE OR BREAK UNDER LOAD. MOLEX DOES NOT RECOMMEND USING STANDARD MATING COMPONENTS (SERIES 44428, 44432, OR 44300) FOR TESTING PURPOSES.

REV	DESCRIPTION	
D1	ADD MATING DIMENSION EC NO: UCP2005-2881 DRWN:JLOWE 2005/07/07 CHKD:SSOUSEK 2005/07/13 APPR:FSMITH 2005/07/15	

QUALITY SYMBOLS: ▼-0 ; (C)-0

GENERAL TOLERANCES (UNLESS SPECIFIED)

	mm	INCH
4 PLACES	± ---	± ---
3 PLACES	± ---	± .010
2 PLACES	± 0.25	± .014
1 PLACE	± 0.35	± ---
ANGULAR ±1/2°		

DRAFT WHERE APPLICABLE
MUST REMAIN WITHIN DIMENSIONS

SCALE: ---
DESIGN UNITS: INCH
DIMENSION STYLE: IN/MM
THIRD ANGLE PROJECTION
REVISE ON CAD ONLY

DRAWN BY: BURLESON DATE: 2000/07/13
CHECKED BY: MUELLER DATE: 2000/07/13
APPROVED BY: EDGLEY DATE: 2000/07/13

TITLE: MICRO-FIT (3.0) BMI R/A RECEPTACLE ASS'Y 4 - 24 CIRCUIT

molex MOLEX INCORPORATED

MATERIAL NO.: SEE CHART
DOCUMENT NO.: SD-44764-001
SHEET NO.: 1 OF 1

THIS DRAWING CONTAINS INFORMATION THAT IS PROPRIETARY TO MOLEX INCORPORATED AND SHOULD NOT BE USED WITHOUT WRITTEN PERMISSION

C

MATERIAL NUMBER	NUMBER OF POSITIONS	PLATING OPTION
	04	A
	04	B
	04	C
	06	A
	06	B
	06	C
	08	A
	08	B
	08	C
	10	A
44764-1022	10	B
	10	C
	12	A
	12	B
	12	C
	14	A
	14	B
	14	C
	16	A
	16	B
	16	C
	18	A
	18	B
	18	C
	20	A
	20	B
	20	C
	22	A
	22	B
	22	C
	24	A
	24	B
	24	C

NUMBER OF POSITIONS	DIM. "A"	DIM. "B"	DIM. "C"
24	1.445/(36.70)	1.299/(33.00)	1.181/(30.00)
22	1.327/(33.70)	1.181/(30.00)	1.063/(27.00)
20	1.209/(30.70)	1.063/(27.00)	.945/(24.00)
18	1.091/(27.70)	.945/(24.00)	.827/(21.00)
16	.972/(24.70)	.827/(21.00)	.709/(18.00)
14	.854/(21.70)	.709/(18.00)	.591/(15.00)
12	.736/(18.70)	.591/(15.00)	.472/(12.00)
10	.618/(15.70)	.472/(12.00)	.354/(9.00)
8	.500/(12.70)	.354/(9.00)	.236/(6.00)
6	.382/(9.70)	.236/(6.00)	———
4	.264/(6.70)	.118/(3.00)	———

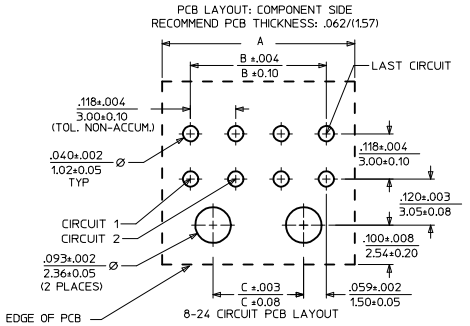

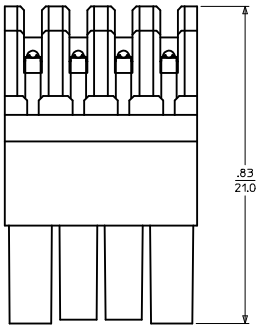

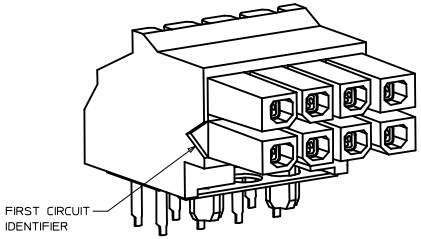

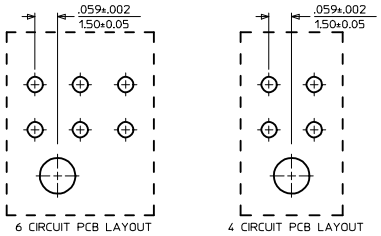

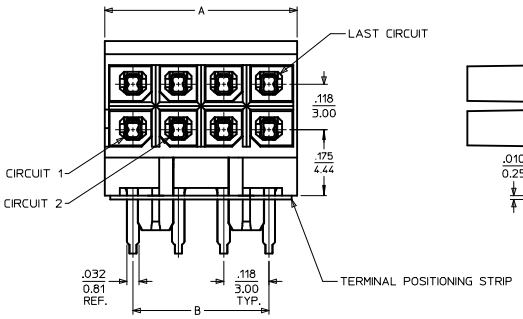

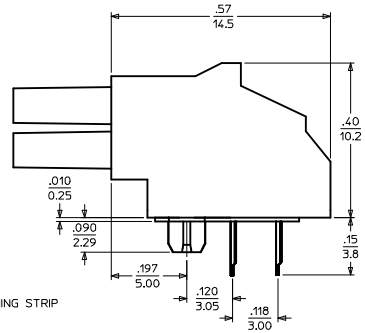

NOTES:
1. MATERIAL:
   HOUSING: HIGH TEMP NYLON, GLASS FILLED, U.L. 94V-0, COLOR BLACK
   TERMINAL: PHOSPHOR BRONZE ALLOY
   POSITIONING STRIP: MYLAR, COLOR NATURAL
2. FINISH:
   (A) = HOT TIN DIP: .000040/0.00102 MIN.
   (B) = SELECTIVE GOLD IN THE CONTACT AREA: .000015/0.00039 MIN., SELECTIVE TIN IN THE PC TAIL AREA: .000100/0.00254 MIN., BOTH OVER .000050/0.00127 MIN. NICKEL.
   (C) = SELECTIVE GOLD IN THE CONTACT AREA: .000030/0.00076 MIN., SELECTIVE TIN IN THE PC TAIL AREA: .000100/0.00254 MIN., BOTH OVER .000050/0.00127 MIN. NICKEL.
3. PRODUCT SPECIFICATIONS: PS-44300-001
4. PACKAGING SPECIFICATION: TUBE PACKED PER PK-44764-002
5. MATES WITH HEADER ASSEMBLY 44428, 44432, AND 44300
6. MOLEX RECOMMENDS THE USE OF MICRO-FIT TEST PLUG (SERIES 44242) WHENEVER CONTINUITY TESTING IS PERFORMED. TEST PLUGS MUST NOT BE USED TO MAKE OR BREAK UNDER LOAD. MOLEX DOES NOT RECOMMEND USING STANDARD MATING COMPONENTS (SERIES 44428, 44432, OR 44300) FOR TESTING PURPOSES.

INITIAL RELEASE
EC NO: UCP2009-0615
DRWN: GAVERILL 2008/09/15
CHKD: SSOUSEK 2008/09/16
APPR: FSMITH 2008/09/16
DESCRIPTION
A
REV

QUALITY SYMBOLS
▼ = 0
(C) = 0

GENERAL TOLERANCES (UNLESS SPECIFIED)

	mm	INCH
4 PLACES	± ---	± ---
3 PLACES	± ---	± .010
2 PLACES	± 0.25	± .014
1 PLACE	± 0.35	± ---
ANGULAR ±1/2°		

DRAFT WHERE APPLICABLE
MUST REMAIN WITHIN DIMENSIONS

SCALE: ---
DESIGN UNITS: INCH
DIMENSION STYLE: IN/MM
DRAWN BY: GAVERILL — DATE: 2008/09/11
CHECKED BY: SSOUSEK — DATE: 2008/09/11
APPROVED BY: FSMITH — DATE: 2008/09/15

THIRD ANGLE PROJECTION
REVISE ON CAD ONLY

TITLE
MICRO-FIT (3.0)
BMI R/A RECEPTACLE ASS'Y
4 - 24 CKT, TUBE PACKED

molex MOLEX INCORPORATED

MATERIAL NO.: SEE CHART
DOCUMENT NO.: SD-44764-003
SHEET NO.: 1 OF 1

THIS DRAWING CONTAINS INFORMATION THAT IS PROPRIETARY TO MOLEX INCORPORATED AND SHOULD NOT BE USED WITHOUT WRITTEN PERMISSION

C