CAMBION â

Technical Data Sheet

Wearnes Cambion LTD
Castleton, Hope Valley, Derbyshire, S33 8WR, England
Telephone: +44(0)1433 621555 Fax: +44(0)1433 621290
Web: www.cambion.com Email: enquiries@cambion.com

460-3342 Swage mount, .061(1,57) diameter pin

Recommended mounting hole .066 (1,70) ± .002 (0,05).

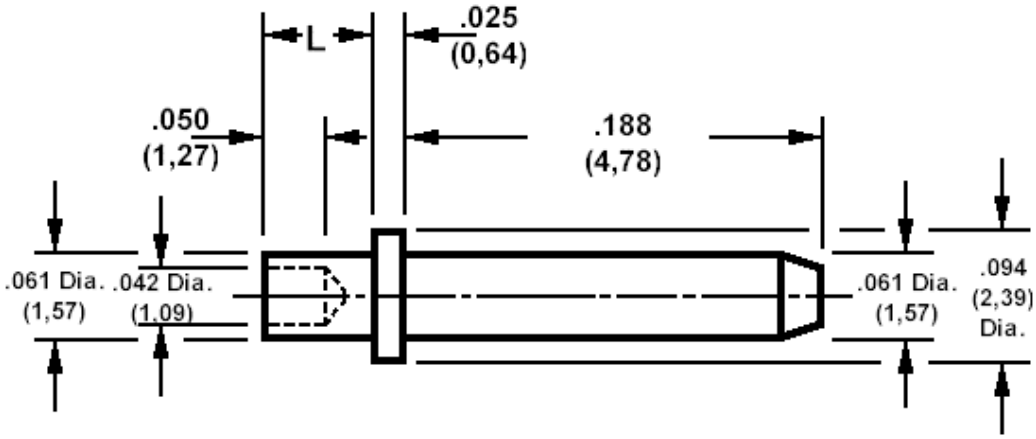

How to order code
460-3342-XX-YY-00
Basic Part No XX = L dimension, YY = Plating Finish

MATERIALS			
Component	**Material**	**Finish (-03)**	**Finish (-04)**
Pin	Brass	Gold over Nickel	Electro-tin over copper

DIMENSIONS (XX)			
Basic Part Number	**(XX)**	**L**	**Board Thickness**
460-3342	-01	.053 (1,35)	.031 (0,79)
	-02	.083 (2,13)	.061 (1,57)
	-03	.115 (2,92)	.094 (2,39)

Copyright© Cambion® Friday, 14 February 2003