Holder / No. 803 01 for 500 Volts

Panel Mount for 6.3x32 mm Fuses

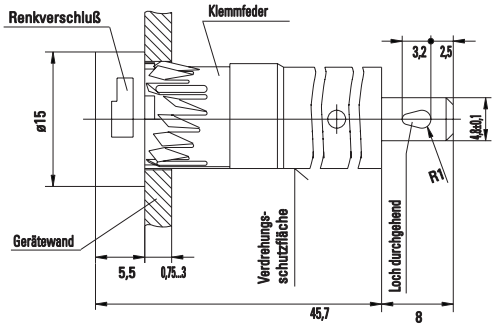

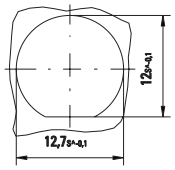

Panel Mounting Hole

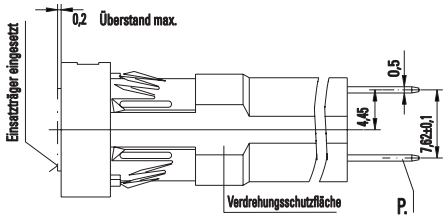

Cap / No. 816 for 500 Volt

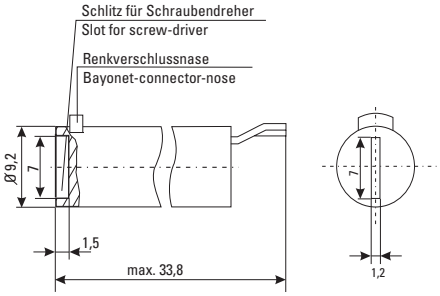

For 6.3x32 mm Fuses

Specifications

Packaging
0 bulk (100 pcs.)

Standard
IEC 60127-6
UL 512
CSA C22.2

Approvals

Mounting
Pluggable with clamping spring in 12.7mm diameter D-hole (panel of 0.75mm - 3 mm)

Terminals
Solderable or 4.8mm quick connect-fits 0.5mm tab

Protection Class & Category
IP 40 (IEC 60529)
PC2 (IEC 60127-6)

Materials

Holder / Cap:	Thermoplastic (Polyamide PA 6.6), black, UL94 V-0
Clamp spring:	non-corrosion metal, untreated
Metal Parts:	Copper alloy, corrosion protected
Terminals:	solderable tinned

Electrical Data (23°C)

Rated Voltage:	500 V
Rated Current:	10 A (VDE/SEMKO) 16 A (UL/CSA)
Rated Power :	4 W (VDE/SEMKO)

Operating Temperature
-25°C to +70°C (consider de-rating)

Climatic Test
-25 °C/+70 °C/21 days (IEC 60068-2-1...3)

Stock Conditions
+10°C to +60°C
relative humidity ≤ 75% yearly average, without dew, maximum value for 30 days - 95%

Contact Resistance
≤ 5mΩ

Dielectric Strength
> 2 kV

Impulse Voltage
4 kV with 1.2 / 50 µs

Insulation Resistance
> 10^3 MΩ (500 VDC, 1 min.)

Solderability
235°C, 2 sec. (soldering bath) (IEC 60068-2-20)
350 °C, 3 sek. (soldering iron) (IEC 60068-2-20)

Soldering Heat Resistance
260°C, 5 sec. (soldering bath) (IEC 60068-2-20)

Minimum Cross Section
Conductor - 2.5mm^2

Marking
803, 500 V, Approvals

Unit Weight
4.9 g (803) / 2.0 g (816)

RoHS

Order Information

Qty.	Order-Number	Series			Packaging
			0000	00	0

Note: 1.00 means the number one with two decimal places. 1,000 means the number one thousand.

Specifications are subject to change without notice

WICKMANN

In our continuing strategy to deliver unparalleled circuit protection solutions, technical expertise and application leadership, we proudly introduce the WICKMANN Group and its products to the Littelfuse portfolio.

WebSite www.littelfuse.com